KIRBY

Supply of 2 Static Excitation Systems

KIRBY

2025.06.0822 - Kirbycorp - Generator for gas turbine

Technical Offer 2025.06.0822 rev A

JEUMONT ELECTRIC

Table des matières

1) **introduction** 3
2) **GENERAL INFORMATION** 4
3) **SARN REGULATOR-V2.e** 5
   General information 5
   Regulation system 5
4) **CARACTERISTIQUES TECHNIQUES** 6
5) **FONCTIONNALITIES** 7
   MANUAL 7
   AUTOMATIC 7
   Regulation : Q (reactive power) of Tan (PHI) 7
   Excitation current limitation 7
   Abosbtion of reactive power limit 8
   Stator voltage limitation 8
   Oscilloperturbography 8
6) **EMBEDED FUNCTIONS** 8
   MAIN faults 8
   Alarms : ..... **Erreur ! Signet non défini.**
7) **HUMAN MACHINE INTERFACE** 9
8) **INTERFACE AVEC L'EXTERIEUR.** 10
9) **FACTORY ACCEPTANCE TEST** 11
10) **INSTALLATION AT SITE : out of jeumont scope** 12
11) **DOCUMENTATION** 12
12) **LIST OF RECOMMENDED PROTECTION (OPTIONS)** 12
13) **SPARES : not included at this stage** 13
14) **EXCLUSONS J.E.** 13
15) **SYNOPTIQUE** 14

TECHNICAL OFFER

1) introduction

Our commercial and technical teams have carefully reviewed your requirements and constraints for the refurbishment of the voltage regulators of the two generating units of the ARRENS power plant.

We propose below a detailed description of the project organization and the technical solutions that will be implemented.

The project will be carried out in six phases:

- Preliminary technical visit (will be realized)
- Engineering studies
- Supply of equipment

The proposed regulator is of type SARN-V2, application V2.6

As per the following scope of supply:

ITEM	DESCRIPTION	Qty
A	Excitation cabinet according to below description	2
B	OPTIONS: Protection RELAY door mounted	2

2) GENERAL INFORMATION

1 cabinet integrating the regulator and the excitation power section will be supplied.

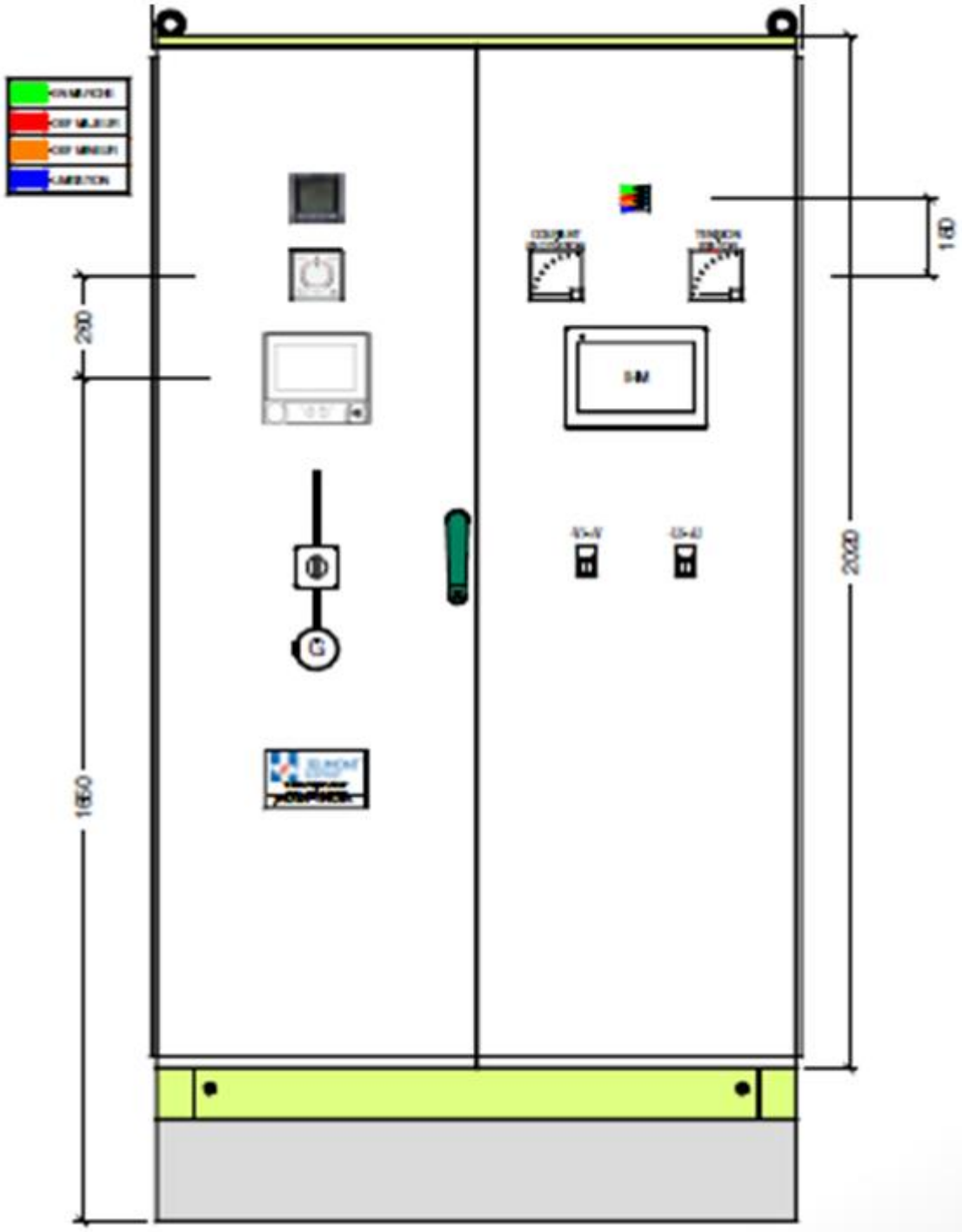

Equipment 2: H = 2000 mm, W = 1600 mm, D = 800 mm base

3) SARN REGULATOR-V2.e

General information

Proposed equipment is a digital excitation and regulation system SARN-V2.e

Control system provides the following two operating modes:

- Manual mode: digital excitation current regulation
- Automatic mode: digital stator voltage regulation

Additional function:

- Excitation current limitation
- Stator current limitation
- Reactive power absorption limitation
- Stator voltage limitation
- Over excitation up to 1.2
- Voltage synchronization before synchronization
- Reactive droop
- Q or Tan Phi control
- Remote setpoint adjustment
- Disturbance recording (CSV format

Regulation system

The digital voltage regulation excitation system we offer is the SARN-V2.

The Automatic Digital Regulation System designed by J.E. is a digital regulator intended for all types of synchronous machines.

The integration of the intelligent component into an M340 industrial processing unit gives SARN the exceptional quality of a reliable and open system.

SARN:

- Processing unit:
  - Control module.
  - Human-machine interface module.
  - Management of control sequences and setpoints.
  - Alarm and fault management.
  - Oscilloscope and disturbance recording.
- SIM interface unit:
  - Adaptation of analog measurements.
- Human-machine interface:
  - 7″ color touch screen.
  - Alarm and fault display.
  - Measurement display in a simple and user-friendly graphical environment.
  - Choice of operating modes.
  - Controller settings.
  - Status logging.
  - Trend curves..

4) CARACTERISTIQUES TECHNIQUES

Regulator

Type	Digital SARN-V2
Regulator accuracy	0.25% to 0.35%
Reactive statism	Adjustable from ± 15%
Voltage range	Adjustable between + 10 and + 14% One
Frequency range	± 10% relative to Fn
Tan PHI control range	Adjustable – Default 0 to 1
Q control range	Adjustable – Default +/-Sn
Limitations	Iexcit – Is – Abs Q – Us
Overexcitation	Adjustable up to 1.2 Ifn with adjustable delay from 0 to 200 sec

Measurements (out of Excitation cabinet scope of supply)

Generator voltage	**3 phases : 100V /√3 – CI 0,2** **1 VA per phase**
Generator current	**3 phases 5A – CI : 0,2** **1 VA per pahse**
Network voltage	**1 phase : 100V /√3 – CI 0,5** **1 VA per phase**
Auxiliary voltage	**Out of scope of supply**
For the regulator	**From customer: 110 Vdc**
Excitation	**From PMG (in JE scope of supply)**
For lighting	**230 Vac single phase (from customer)**
Cooling and heating	**230 Vac single phase (from customer)**

5) FONCTIONNALITIES

MANUAL

Numerical current regulation using high limitations for overexcitation and low limitation for reactive power consumption.

Used during testing or in case of loss of voltage regulation

AUTOMATIC

Use of numerical voltage regulation at the generator terminals from internal control instruction through the following:

- Voltage ramp,
- Input +/- REF ± 10 % à ± 14 %,
- Reactive power de ± 15 %,
- Synchronization of voltage before coupling to network
- Remote input signal
- Regulation in Q or Tan PHI .

Regulation: Q (reactive power) of Tan (PHI)

Control on the HMI (through secured access) only if the generator is coupled to the network.

When activated this regulation will act directly on the voltage, with a time constant of few seconds, to adjust the reactive power or Tan Phi of the generator.

The required value is set by default and can be changed on the HMI. Once the generator is connected to the network, it is adjustable through specific reference.

Excitation current limitation

Limits and duration can be set in the HMI

This limitation allows working at a certain limit of excitation current during a certain amount of time, with an automatic return to normal excitation current at the end of the time set.

Absorption of reactive power limit

Parameters inside the HMI

This limitation avoids entering in asynchronous mode of the generator.

Stator voltage limitation

Act directly to avoid overvoltage on the stator terminals (limitation can be set on the HMI)

If the voltage is exceeding a set value, the regulation will limit the excitation current to limit the voltage at the terminals.

Oscillo perturbography

Allow the saving of all the parameters and all signals in case of fault. For each fault a csv file is generated with registration of 3 seconds before the faults and 3 seconds after the fault.

6) EMBEDED FUNCTIONS

MAIN faults

- I/O fault
- Watchdog
- Excitation contactor failure
- Fuses fault
- Fault on CBs low voltage
- Starting time
- Excitation current fault
- External fault
- Falt on protection relay (if included)

Alarms:

- Modbus communication
- Limitation on reactive power
- Limitation on stator voltage
- Limitation on excitation current
- Limitation on the stator current

7) HUMAN MACHINE INTERFACE

Includes

- Touch screen allowing management of voltage regulation
- Synchro check
- Buttons to allow manual settings
- Indicator of main parameters voltage current, power

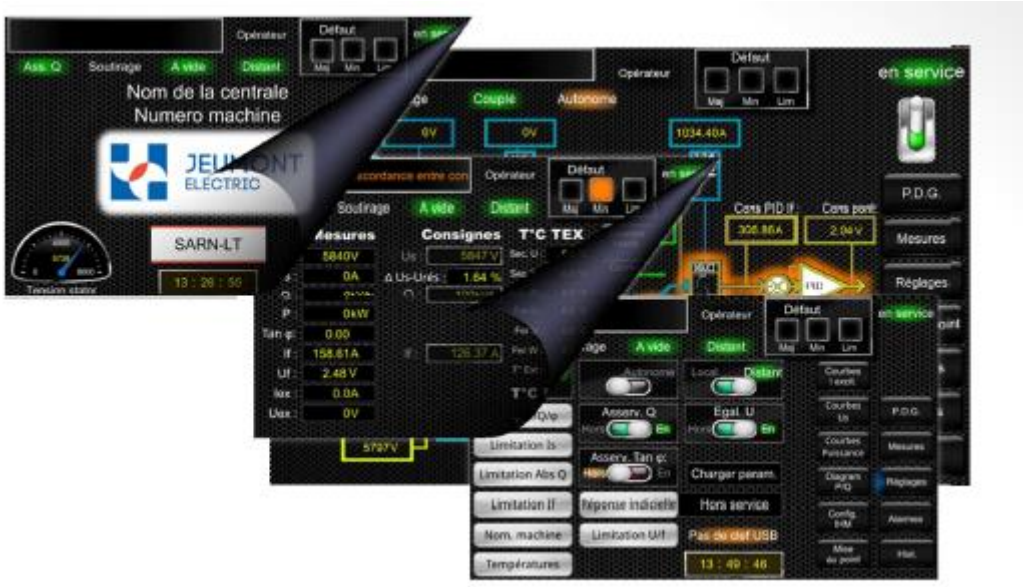

8) INTERFACE AVEC L'EXTERIEUR.

32 digital inputs are foreseen:

- Main Cb closed
- Excitation Voltage
- Ref @ 0 of the reactive power
- Island mode
- Main CB open
- Stop of turbine
- Open of CB by the Turbine
- PMG CB open
- 4 spares

64 digital output are foreseen

- start
- Stop
- Trip from Excitation cabinet
- Alarm from excitation
- Manual mode
- Automatic mode
- Reactive power reference
- Tn Phi
- Max reference
- Min reference
- Limitation high
- Limitation low
- Local mode
- Synchro check
- …

Analog inputs:

- Reactive power reference
- Tan phi reference

Analog outputs

- Stator voltage
- Stator current
- Generator frequency
- Active power
- Reactive power
- Cos phi
- Excitation current

9) FACTORY ACCEPTANCE TEST

Factory test scope:

- Wiring check
- verification of connection tightness,
- gradual power-up of equipment,
- adjustment and verification of measurement chains,
- validation of chopper operation,
- validation of control and feedback loop operation,
- validation of various functions,
- validation of limitation operation,
- validation of fault and alarm chains,
- validation of the operation of the Min/Max If relay,
- validation of the sequencing and information reporting,
- validation of the protection relay.

b) Scope of on-site tests (out of JEUMONT scope of supply at this stage)

- Verification of connections and links,
- Gradual power-up of equipment,
- Monitoring of external information exchange,
- Adjustment with the machine stopped,
- Validation of the shutdown chains,
- Inspection of the power circuit,
- Adjustment with the machine under load,
- Adjustment and validation of limitations,
- Validation of motor measurements and protections,
- Validation of the trip chain.

10) INSTALLATION AT SITE: out of jeumont scope

11) TRAINING: out of JEUMONT scope

12) DOCUMENTATION

Standard JEUMONT Electric documentation will be delivered.

- Schedule
- Calculation notes
- Single line diagram
- General layout and main item
- Testing report
- User manual

13) LIST OF RECOMMENDED PROTECTION (OPTIONS)

- ANSI 87G Differential protection
- ANSI 49 Overload
- ANSI 21 distance relay,
- ANSI 21 Low impedance
- ANSI 51 Alarm current
- ANSI 59 overvoltage,
- ANSI 27 under excitement
- ANSI 81H over frequency
- ANSI 81L under frequency
- ANSI 32 Directional power relay
- ANSI 59N Ground fault
- ANSI 46 Current negative sequence
- ANSI 46 Alarm negative sequence
- ANSI 40 Excitation loss
- ANSI 78PS Pole slip
- mini excitation,
- maxi excitation,
- ANSI F64R rotor ground fault

.

14) SPARES: not included at this stage

15) EXCLUSONS J.E.

- Ny civil work
- Any installation
- Any integration studies
- Any auxiliary voltage
- Any transport and storage

16) SYNOPTIQUE

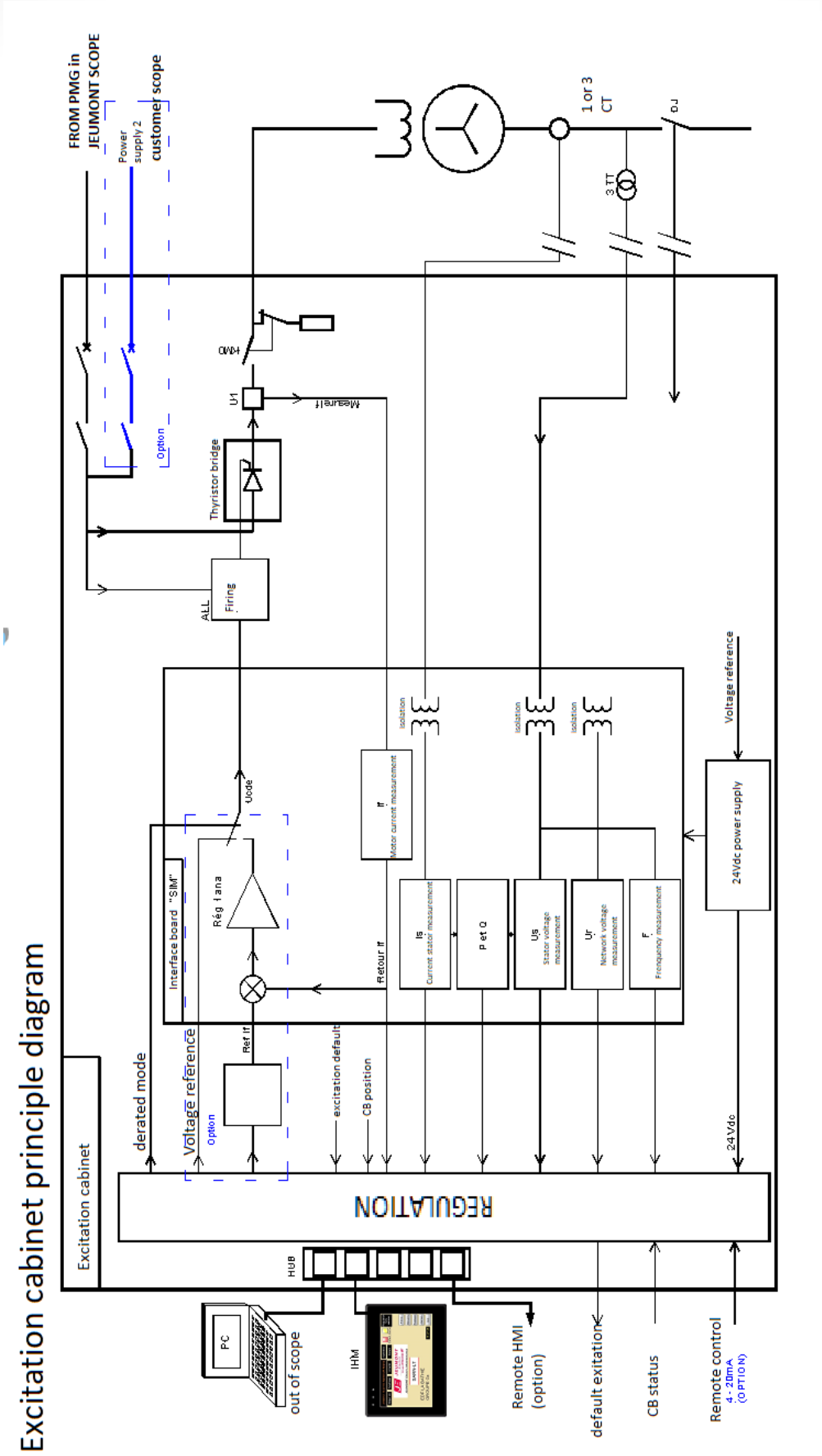

Other auxiliary voltage as per above indication